SOME SPECIFICS ABOUT HARVESTER ADJUSTMENTS FOR REDUCING BRUISE

by
Robert K. Thornton
U & I, Inc., Tri Cities, Wa.

Introduction

Since the modernization and mechanization of potato harvesting the problem of bruise and it's prevention have plagued potato growers the world over. Many harvester manufacturers have and will continue to try and reduce bruise through modifications of these machines, however, these changes thus far have had a minimal affect on our bruise problem. This report illustrates steps that can be used to minimize, understand, and control bruise problems within a harvester. In effect this will provide growers the opportunity to take advantage of increased returns using a minimal amount of time, money, and effort.

The important points of this discussion are related to the methodology of timing harvester chain speeds, collecting and determining the correct internal harvester to ground speed ratios, and finally to illustrate some of the problems found in correct timing of harvesters. Although this article is orietned toward harvester adjustments, any chain or belted piece of potato conveying equipment (pilers, truck belts, etc.) can be checked for possible improvements to lower potato bruise.

Chain Speeds:

The general formula needed in order to calculate each chain speed throughout a harvester is given in Equation 1.

Equation 1.

CHAIN SPEED FORMULA

$$\text{RPM'S} \times \frac{\text{Chain Pitch}}{12} \times \text{No. Sprocket Teeth} = \text{ft/min}$$

Multiplying ft/min X 1/88 (.0114) is the conversion to MPH. This conversion need only be performed if you are more comfortable with MPH figures. The easiest way to gather RPM information is to use a digital tachometer. Several types are available that will do the job required. RPM readings need only be taken from the shaft connected to the driven-type sprockets. (Fig. 1).

RPM readings are needed for each chain, i.e., primary, secondary, deviner, rear-cross, and side elevator. These readings can be taken with the harvester running in place or as it moves through the field. In either case tractor RPH and PTO shaft speeds must be at the speed planned for the majority of potato harvest.

Chain pitch is simply the distance between two links of potato conveyor chain. The pitch is not affected by the addition or deletion of padding, however, as the chain is used the links tend to stretch, particularly on the hook type chain. A remeasurement is needed as the chain wears. Common link sizes are 1.75 and 1.56 inches. Chain pitch dimensions are divided by 12 for conversion back to feet in the equation.

This Presention is part of the Proceedings of the 1983 Washington Potato Conference and Trade Fair.

Figure 1.

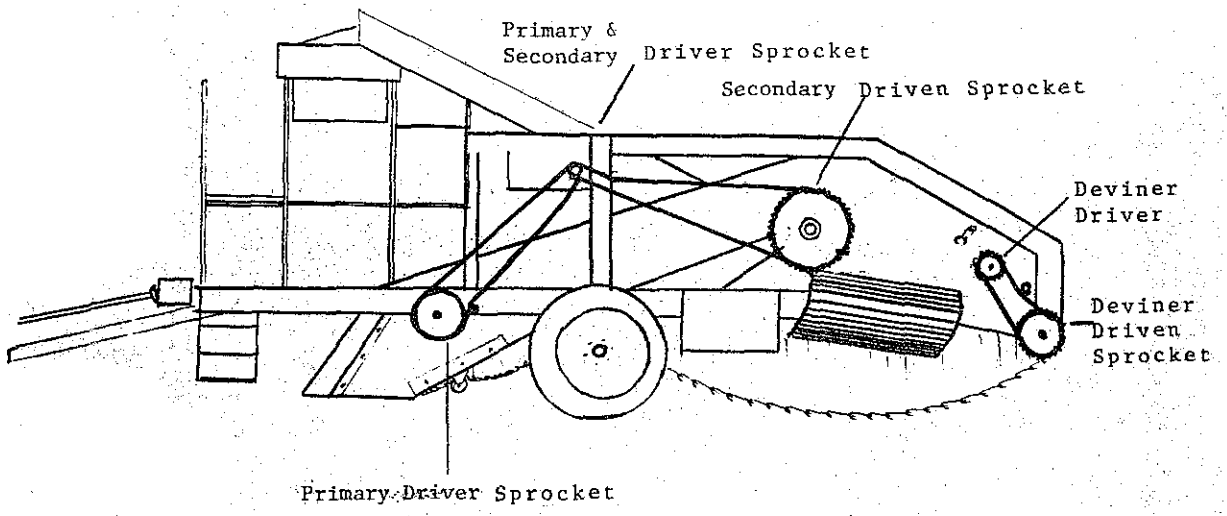

The drive sprocket that powers the potato chain is the correct sprocket to gather information about teeth numbers. The number of sprocket teeth will differ with machine type, i.e., Logan, Lockwood, Braco, etc., and chain location i.e., 1, 2, etc. For organization it may be easiest to keep track of your readings for the chain speed equation using the format from this illustration.

HARVESTER NO._____

	RPM's	X	Chain Pitch	X	Sprocket Teeth = ft/min		
Primary	X	X	Y	X	Z	=	?
Secondary	X	X	Y	X	Z	=	?
Deviner	X	X	Y	X	Z	=	?
Rear Cross	X	X	Y	X	Z	=	?
Side Elevator	X	X	Y	X	Z	=	?

Ground Speeds:

The easiest way to get harvester ground speeds is to check the tractor speedometer. Unfortunately, this is not a very accurate method due to speedometer wear and tear, tractor tire slippage, etc. A simple formula to follow in getting accurate ground speeds is as follows:

Equation 2.

GROUND SPEED FORMULA

$$\frac{\text{Distance for 3 Revolutions} = \text{ft}}{\text{Time for 3 Revolutions} = \text{min}}$$

To use the formula first mark a nonpowered tire, preferably a harvester tire. Have the harvester run through the field at "Normal" harvest speed. As this is happening first measure the distance covered in 3 tire revolutions. Then time the same tire for 3 revolutions at this same speed.

Chain Speed to Ground Speed Ratios:

Now you have chain speeds and a ground speed. Converting these to ratios for easy comparison with recommended Washington State chain speed to ground speed ratios (Fig. 2) will give you a starting point to work from in harvester chain adjustments.

Figure 2.

CHAIN SPEED TO GROUND SPEED RATIOS

Primary	=	1.2 X Ground Speed
Secondary	=	.65 X Ground Speed
Deviner	=	.65 X Ground Speed
Rear Cross	=	.55 X Ground Speed
Side Elevator	=	.50 X Ground Speed

These recommendations will vary depending on digging and soil conditions, however, if you are within 10% of these recommendations you will approach maximum bruise free from simple chain speed adjustments. If your harvester is not within satisfactory chain speed to ground speed ratios, then one additional piece of information is needed before correct adjustments can be made. A driver and driven outside chain sprocket tooth count is required. Fig. 3 illustrates the principle behind how and what changes to make on these sprockets.

Figure 3.

	Driver	Driven
Too Slow:	Increase Size	Decrease Size
Too Fast:	Decrease Size	Increase Size

If a harvester is excessively fast or slow it may require changing both sprockets in order to make the proper adjustments. Whenever possible the smaller, driver sprocket should be replaced because of cost.

An example of how this principle works is illustrated below:

Example 1.

Primary is 10% slow
20 tooth to a 22 tooth driver sprocket

or

33 tooth to a 30 tooth driven sprocket

Examples 2 and 3 show the cost effectiveness of making changes in chain speeds.

Example 2.

HARVESTER CHAIN SPEEDS AND RATIOS

Primary Ratio	2.9 MPH/2.33 MPH	=	1.24	: 3.3% Fast
Secondary Ratio	2.17 MPH/2.33 MPH	=	.93	: 30% Fast
Deviner Ratio	2.0 MPH/2.33 MPH	=	.86	: 24% Fast
Rear Cross Ratio	2.32 MPH/2.33 MPH	=	1.0	: 55% Fast
Side Elevator Ratio	1.8 MPH/2.33 MPH	=	.78	: 36% Fast

In this example all of the chains are moving too fast. The simplest solution would be to speed up the tractor. This was not possible here because of very sandy and hilly ground. In this instance after the proper sprocket changes were implemented the weekly bruise free improved from 62 to 83%. This shows the profit potential by using this technique.

Example 3.

HARVESTER CHAIN SPEEDS AND RATIOS

90% bruise free @ 1.2 MPH ground speed = 10-15 loads/day
Increase speed to 2.1 MPH @ 90% bruise free = 20^{+} loads/day

Here harvester adjustments were used to speed up a harvester. By doing so the harvester was able to dig more potatoes under ideal field conditions while preserving the high bruise free readings. This is a more efficient and timely way of using the harvester.

Problems

After having presented the basics about timing harvesters and other potato conveying equipment I must offer a caution to you. There are situations that can create problems in harvester adjustments unless you are aware of them.

Once adjustments have been made on a harvester, temporary changes in digging conditions may make it essential to alter tractor speeds, i.e., ground speed. When this happens, remember one thing. Adjust tractor speeds with the gas, not gears whenever possible! In doing so you will remain much closer to optimum chain to ground speed ratios. If these harvest conditions persist you will need to retime and adjust the harvester in order to maintain consistantly high bruise free digging.

In all harvest operations it is important to know the tractor-harvester pairings from year to year. Once you have made the proper adjustments it becomes critical to maintain these same tractor-digger combinations; tractors and harvesters are like people, no two are alike. Even if they look similar, they will not perform alike. A simple record of pairings will prevent the need for readjusts each year, resulting in savings of both time and money.

Harvesters can cause problems with chain speed calculations because there are many things that affect sprockets and chains. Watch out when changing gear boxes and sprockets. These changes may not directly affect chain speed calculations, however, anything done to a harvester must be looked at closely. Recheck chain speeds after any replacements or changes to avoid problems with lowered bruise free harvesting.

SUMMARY

With this information in hand you are ready to make some decisions about how to minimize and control bruise problems that may be encountered in the future. With experience it will be possible to take measurements and calculate chain speed adjustments rapidly and easily. A tool has been provided that requires a minimal amount of time, effort, and money to help you combat potato bruising. This could possibly have a large impact on profit margins. Now it's up to you to use!